300B SINGLE STEREO POWER AMPLIFIER KIT
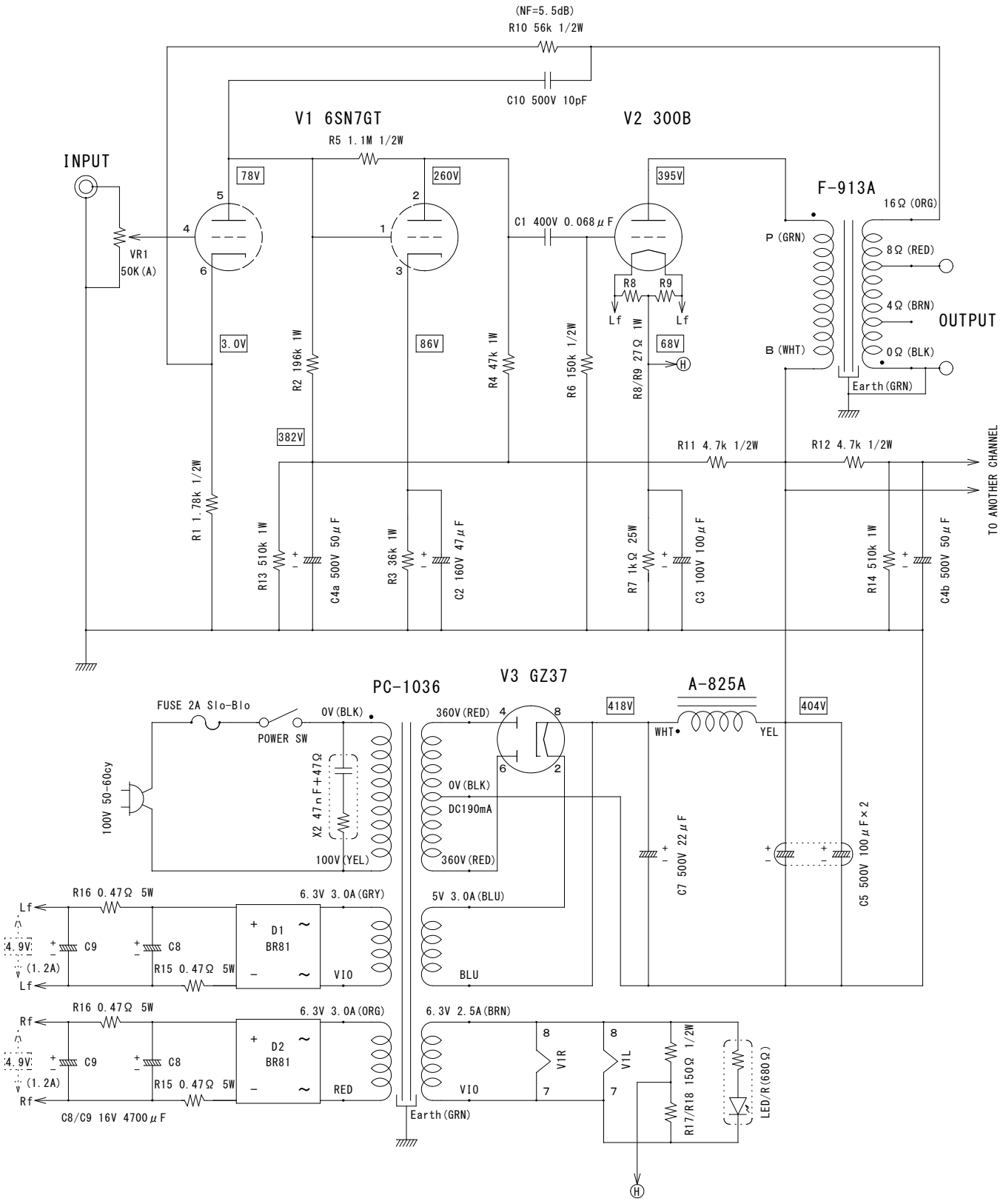
PROFESSOR-2 Ver.F913A-N7 SCHEMATIC